TECHNICAL DATASHEET

COSY-C-50S3

Product Code : 29800050020900001

Isolated Hall-effect voltage sensor for railway and industrial applications

The COSY-C-50S3 is an isolated voltage sensor for accurate measurement of DC, AC, pulse and arbitrary voltage signals, with galvanic isolation between the primary and secondary circuits. The primary voltage is applied directly to the +HT and -HT terminals; it passes through an isolating amplifier and is converted into a secondary output current IS, isolated from and exactly proportional to the primary voltage. Once passed through an external measuring resistor RM, this current gives a measurement voltage VM also exactly proportional to the primary voltage.

Rated for 50 V nominal, ±75 V measuring range, this reference is part of the ADISENS COSY-C range qualified for railway (fixed installations and onboard) and industrial applications.

50 V	±75 V	8.5 kV	30 µs
Primary nominal voltage	Measuring range	Dielectric strength (AC)	Delay time (10%)

ENGINEERING VALUE

High accuracy, low drift — galvanically isolated current-output measurement, low temperature variation, high immunity to external interference.

Fast response — short delay time, suited to protection and control loops.

Railway-qualified — designed and tested against the EN 50155 / EN 50121-3-2 / EN 50124-1 / EN 45545 / EN 61373 railway standard set, in addition to EN 50178.

Low power — low consumption and low primary-side losses.

BEST-FIT APPLICATIONS

Railway — auxiliary and propulsion converters, three-phase or single inverters, substations, onboard and fixed installations.

Industrial power electronics — variable-speed and servo motor drives, static converters, propulsion and braking choppers.

Power systems — battery-supplied applications, UPS, SMPS, welding power supplies, renewable energy (solar & wind), high-power drives.

Compliance and warranty markings

CE

RoHS COMPLIANT

WARRANTY 3 YEARS ADISENS

RAILWAY & INDUSTRIAL · EN 50155 CERTIFIED

Standards: EN 50155 | EN 50178 | EN 50124-1 | EN 50121-3-2 | EN 45545 | EN 61373

ADISENS Ltd | POD 2, The Old Station House, 15A Main Street, Blackrock, Co. Dublin, A94 T8P8, Ireland
contact@adisens-tech.com | www.adisens-tech.com |

Measurement principle and environmental characteristics

Bi-directional power supply & measurement principle

The primary voltage to be measured is applied directly to the +HT and -HT terminals of the sensor. This voltage passes through an isolating amplifier and is then converted into a secondary output current IS. This secondary current IS is electrically isolated from the primary voltage, to which it is exactly proportional. The voltage sensor measures instantaneous values. The secondary current IS can then flow through a measuring resistor RM. The measurement voltage VM across this measurement resistor RM is therefore also exactly proportional to the primary voltage. The sensor power supply is also isolated from the primary voltage.

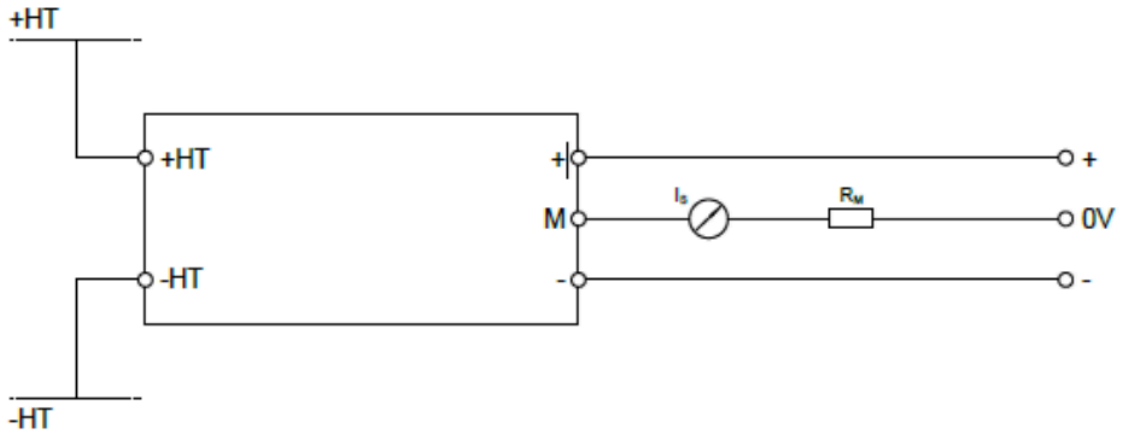

Insulation and environmental characteristics

Parameter	Symbol	Typ.	Unit
Dielectric strength	VD	8.5	kV (50 Hz, 1 min)
Insulation resistance	RIS	1000	MΩ
Creepage distance	dCP	60	mm
Clearance	dCL	43	mm
Ambient operating temperature	TA	-40 to +85	°C
Ambient storage temperature	TSTG	-50 to +90	°C
Mass	m	290	g
Note	-	Insulated plastic case recognized according to UL 94-V0	

ADISENS Ltd | POD 2, The Old Station House, 15A Main Street, Blackrock, Co. Dublin, A94 T8P8, Ireland
contact@adisens-tech.com | www.adisens-tech.com |

Electrical and performance data

Unless otherwise stated: T_A = +25°C, V_{CC} = ±24 V, RM = 120 Ω.

Parameter	Symbol	Test conditions	Min.	Typ.	Max.	Unit
Primary nominal r.m.s. voltage	VPN	-	-	50	-	V
Primary voltage measuring range	VPM	-	-75	-	+75	V
Secondary nominal r.m.s. current	ISN	-	-	50	-	mA
Secondary current, measuring range	ISM	-	-75	-	+75	mA
Measuring resistance	RM	see condition	0	133	-	Ω
Supply voltage	±UC	-	±13.5	-	±26.4	V
Current consumption	IC	UC=±24V, UP=0	-	25 + IS	-	mA
Sensitivity	S	Vp=0 to ±50V	1000.00	1000.00	1000.00	µA/V
Power-on time	TON	-	-	-	-	ms
Output noise	INOISE	1 kHz – 100 kHz	-	-	-	µA
Primary power loss	P	Vp=50V	-	0.9	-	mW
Linearity error	EL	-	-	±0.5	-	% of VPM
Accuracy	Etot	@25°C	-	±0.5	-	%UPN
Accuracy over full temperature range	Etot	T_A=-40…+85°C	-	±1.0	-	%UPN
Delay time (10% of final value)	tD10	-	-	30	-	µs
Delay time (90% of final value)	tD90	-	-	50	-	µs
Resistance of primary (winding)	RP	-	-	2.7	-	MΩ
Offset current	IO	IP=0	-	±80	-	µA

Ordering information

Part number	Product code	Nominal voltage	Measuring range
COSY-C-50S3	29800050020900001	50 V	-75 to +75 V

The specified measurement performance is achieved only when the sensor is used within the stated electrical, thermal and load conditions.

ADISENS Ltd | POD 2, The Old Station House, 15A Main Street, Blackrock, Co. Dublin, A94 T8P8, Ireland
contact@adisens-tech.com | www.adisens-tech.com |

Mechanical dimensions and mounting

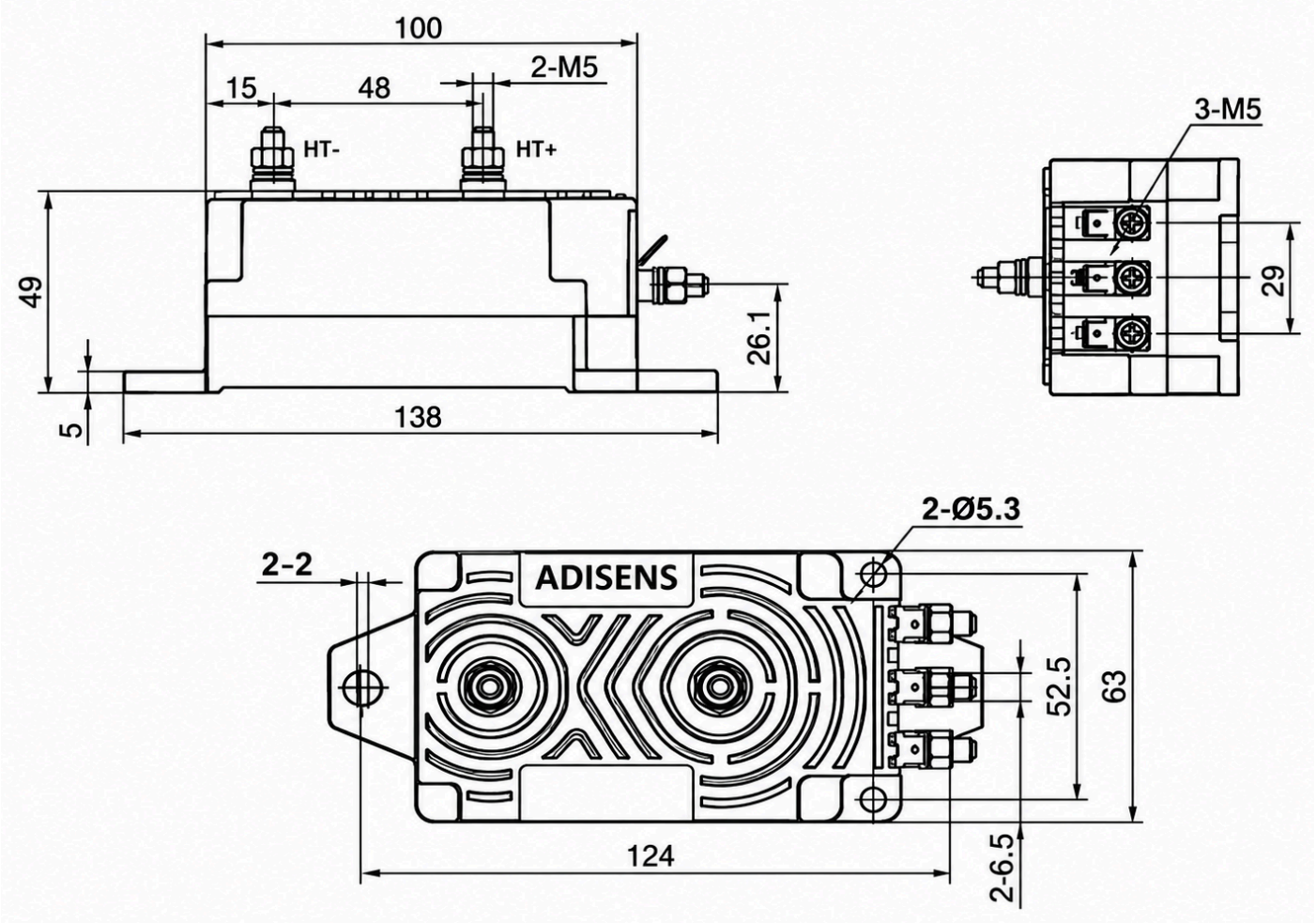

All dimensions are in millimetres. Tolerances for unmarked scales: ±1 mm. Mechanical envelope and mounting are shared across the full COSY-C range.

Mounting recommendation

1. **Mounting method:** 2 × ø6.5 mm slotted holes, 2 × M6 copper or SS304 screws (recommended torque 2.5 N·m).
2. **Primary connection:** 2 × M5 threaded studs.
3. **Secondary connection:** 3 × M5 threaded studs, or 6.3 × 0.8 mm terminal.
4. **Signal output:** the primary voltage is measured as a voltage across the external measurement resistor RM, connected between terminal M and 0 V.

ADISENS Ltd | POD 2, The Old Station House, 15A Main Street, Blackrock, Co. Dublin, A94 T8P8, Ireland
contact@adisens-tech.com | www.adisens-tech.com |

Safety, compliance and quality information

Safety information

The COSY-C-50S3 is a component intended for installation in electrical and electronic systems by qualified personnel, in compliance with applicable international standards such as IEC 61010-1 and local regulations. This transducer operates in high-voltage environments and must be handled with care to avoid direct contact with live electrical components; there is a risk of serious injury or death from electric shock if proper precautions are not taken. It must be used exclusively within limited-energy secondary circuits as specified by IEC 61010-1. Galvanic isolation between primary and secondary circuits does not provide absolute protection against electric shock — always de-energize circuits before installation or maintenance.

Compliance and environmental information

Subject	Information
Electrical safety	Designed for integration into equipment assessed to applicable electrical-safety and railway requirements, including EN 50155, EN 50178, EN 50124-1, EN 50121-3-2, EN 45545, EN 61373 where relevant to the end application.
Materials	Housing in PBT G30/G15, UL94-V0. Further product material and flammability information is available from ADISENS on request.
CE	EU conformity information and the applicable Declaration of Conformity are available from ADISENS on request.
RoHS / REACH	RoHS & REACH compliant. Product environmental declarations are available from ADISENS on request.
Disposal	Dispose of the product in accordance with local requirements for electrical and electronic equipment. Do not incinerate.

Three-year commercial warranty

ADISENS provides a three-year commercial warranty from the date of delivery, subject to the applicable ADISENS warranty terms and conditions. The warranty does not cover incorrect wiring, operation outside specified ratings, unsuitable environmental exposure, unauthorized modification, mechanical damage or improper system integration.

Document identification and control

Document reference	Revision	Issue date	Language	Product code
FT-COSY-C-50S3	V1.0	September 2026	English	29800050020900001

This document is maintained under the ADISENS quality-management document-control process. Always verify that the revision used is the latest version available from ADISENS. Specifications may be updated as part of continuous product improvement. The customer remains responsible for confirming suitability for the intended application.

ADISENS Ltd | POD 2, The Old Station House, 15A Main Street, Blackrock, Co. Dublin, A94 T8P8, Ireland
contact@adisens-tech.com | www.adisens-tech.com |