TECHNICAL DATASHEET

MCT-C-200P4

Product Code : 11200200031200001

Miniature DC & AC earth-leakage current transducer, closed-loop flux-gate principle

The MCT-C-200P4 is a closed-loop (compensated) current transducer using a flux-gate principle, for the electronic measurement of DC, AC and mixed currents, with galvanic isolation between the primary (high power) circuit and the secondary (electronic) circuit.

Its PCB-mounting, single supply voltage and small size make it well suited to earth-leakage and fault-current detection in compact industrial equipment.

200 A	±400 A	2.5 kV	< 60 ms
Primary nominal r.m.s. current	Primary current measuring range	Isolation voltage	Response time

ENGINEERING VALUE

Closed-loop flux-gate measurement — DC, AC and mixed current measurement with galvanic isolation between primary and secondary circuits.

High accuracy — < ±1% accuracy at IPN, T=25°C, with < ±0.5% IPN linearity and low offset drift.

Compact, PCB-mount design — single ±15 V supply, small size, easy integration on the secondary side board.

Fast response — response time < 60 ms, bandwidth DC… 11000 Hz.

BEST-FIT APPLICATIONS

Earth-leakage detection in transformerless installations.

Failure detection in power sources and stacked DC sources (current leakage detection).

1st human-contact protection of PV arrays.

Single- or three-phase differential current measurement up to ±30 A per wire (DC or AC), and symmetrical fault detection (e.g. after a motor inverter).

Compliance and warranty markings

CE RoHS COMPLIANT

WARRANTY 3 YEARS ADISENS

Standards: IEC 61010-1 EN 50178

ADISENS Ltd | POD 2, The Old Station House, 15A Main Street, Blackrock, Co. Dublin, A94 T8P8, Ireland
contact@adisens-tech.com | www.adisens-tech.com |

Electrical and performance data

Unless otherwise stated: T_A = +25°C, V_{CC} = ±15 V.

Parameter	Symbol	Test conditions	Min.	Typ.	Max.	Unit
Primary nominal r.m.s. current	IPN	-	-	200	-	A
Primary current measuring range	IPM	-	-400	-	+400	A
Supply voltage	VCC	-	-	±15	-	V
Current consumption	IC	-	-	45	-	mA
Isolation resistance	RIS	@500 VDC	-	>500	-	MΩ
Output voltage (analog) @±IPN	VOUT	RL=10KΩ, TA=25°C	-	±5	-	V
Output internal resistance	ROUT	-	-	<51	-	Ω
Load resistance	RL	-	-	≥10	-	KΩ
Capacitive loading	CL	-	-	≤5	-	nF
Accuracy (excluding offset)	X	@IPN, TA=25°C, RL=10KΩ	-	<±1	-	%IPN
Linearity	εL	0…±IPN	-	<±0.5	-	%IPN
Temperature coefficient of VOUT	TCVOUT	-	-	<±0.05	-	%/°C
Offset voltage	Vo	-	-	<100	-	mV
Hysteresis offset voltage	VOH	@100% IPN	-	<±20	-	mV
Temperature coefficient of Vo	TCVo	-	-	4	-	mV/°C
Response time	tr	-	-	<60	-	ms
Isolation voltage	Vd	@50(60) Hz, 1 min	-	2.5	-	kV
Bandwidth	BW	-	-	DC 40…11000	-	Hz
Operating temperature	To	-	-20	-	+85	°C
Storage temperature	TS	-	-25	-	+85	°C
Mass	M	-	-	25	-	g
Plastic material	-	-	-	PBT G30/G15, UL94-V0	-	-

Ordering information

Part number	Product code	Primary nominal current	Measuring range
MCT-C-200P4	11200200031200001	200 A	-400 to +400 A

The specified measurement performance is achieved only when the sensor is used within the stated electrical, thermal and load conditions.

ADISENS Ltd | POD 2, The Old Station House, 15A Main Street, Blackrock, Co. Dublin, A94 T8P8, Ireland
contact@adisens-tech.com | www.adisens-tech.com |

Mechanical dimensions and electrical connection

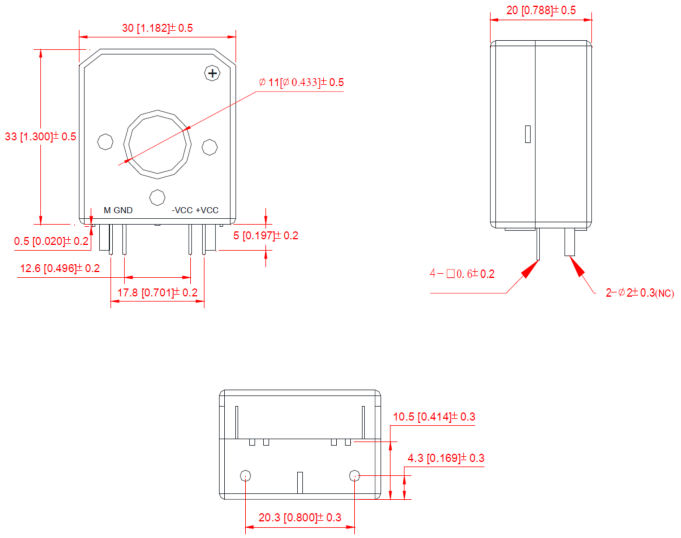

All dimensions are in millimetres. General tolerance: ±1 mm (unless otherwise specified in the drawing). Aperture for primary conductor: ø11 mm.

Pin definition

Marking	Function	Description
M	Measurement output	Analog output voltage, image of the primary current
GND	Signal ground	0 V reference for the output signal
−VCC	Negative supply	−15 V DC supply
+VCC	Positive supply	+15 V DC supply

Secondary connection: 4 pins, 0.6×0.6 mm² (recommended PCB hole 1.2 mm). PCB fixation: 2 pins, ø2 mm (recommended PCB hole 2.2 mm).

Installation essentials

1. **Output polarity:** VOUT is positive when IP flows in the direction of the arrow marked on the housing.
2. **Induced current:** this transducer injects a 500 Hz square wave into the primary circuit; if the primary impedance is low this can induce an AC current in the primary. With a primary impedance ≥10 Ω, VOUT due to the induced current stays ≤0.5% of IPN.
3. **Primary conductor temperature:** must not exceed 100°C.
4. **PCB mounting:** respect the recommended PCB hole diameters for the secondary and fixation pins to ensure correct seating and mechanical retention.

ADISENS Ltd | POD 2, The Old Station House, 15A Main Street, Blackrock, Co. Dublin, A94 T8P8, Ireland
contact@adisens-tech.com | www.adisens-tech.com |

Safety, compliance and quality information

Safety information

The MCT-C-200P4 is a component intended for installation in electrical and electronic systems by qualified personnel, in compliance with applicable international standards such as IEC 61010-1 and local regulations. This transducer operates in high-voltage environments and must be handled with care to avoid direct contact with live electrical components; there is a risk of serious injury or death from electric shock if proper precautions are not taken. It must be used exclusively within limited-energy secondary circuits as specified by IEC 61010-1. Galvanic isolation between primary and secondary circuits does not provide absolute protection against electric shock — always de-energize circuits before installation or maintenance.

Compliance and environmental information

Subject	Information
Electrical safety	Designed for integration into equipment assessed to applicable electrical-safety requirements, including IEC 61010-1, EN 50178 where relevant to the end application. Application domain: Industrial.
Materials	Housing in PBT G30/G15, UL94-V0. Further product material and flammability information is available from ADISENS on request.
CE	EU conformity information and the applicable Declaration of Conformity are available from ADISENS on request.
RoHS / REACH	RoHS & REACH compliant. Product environmental declarations are available from ADISENS on request.
Disposal	Dispose of the product in accordance with local requirements for electrical and electronic equipment. Do not incinerate.

Three-year commercial warranty

ADISENS provides a three-year commercial warranty from the date of delivery, subject to the applicable ADISENS warranty terms and conditions. The warranty does not cover incorrect wiring, operation outside specified ratings, unsuitable environmental exposure, unauthorized modification, mechanical damage or improper system integration.

Document identification and control

Document reference	Revision	Issue date	Language	Product code
FT-MCT-C-200P4	V1.0	September 2026	English	11200200031200001

This document is maintained under the ADISENS quality-management document-control process. Always verify that the revision used is the latest version available from ADISENS. Specifications may be updated as part of continuous product improvement. The customer remains responsible for confirming suitability for the intended application.

ADISENS Ltd | POD 2, The Old Station House, 15A Main Street, Blackrock, Co. Dublin, A94 T8P8, Ireland
contact@adisens-tech.com | www.adisens-tech.com |