TECHNICAL DATASHEET

OPCO-2000C3-2

Product Code : 10102000020750001

Closed-loop Hall-effect current transducer for high-power AC/DC current measurement

The OPCO-2000C3-2 is a closed-loop (compensated) current transducer using Hall-effect technology, designed for the precise measurement of AC and DC currents, with a 2000 A nominal rating and a ±3500 A measuring range.

It operates from a typical supply voltage of (±15…±24 V) ±5% and ensures full galvanic isolation between the primary and secondary circuits, protecting sensitive equipment in industrial and high-power environments where large potential differences can exist between circuits.

2000 A	±3500 A	DC to 200 kHz	< 1 µs
Nominal primary current	Measuring range	Bandwidth (-3 dB)	Response time

ENGINEERING VALUE

High accuracy — < ±0.2% accuracy at IPN with < 0.1% linearity error and low temperature drift.

Measurement headroom — ±3500 A range around a 2000 A nominal current for transient and pulsed currents.

Fast response — Optimized response time (< 1 µs, 90% of nominal) and 200 kHz bandwidth for dynamic control loops.

Isolation — 6.0 kV RMS dielectric withstand, compliant with IEC 61010-1 and EN 50178/EN 50155.

Easy installation — Compact closed-loop housing, easy fastening, can be customized on request.

BEST-FIT APPLICATIONS

Power supplies — Battery, UPS and switching power supply applications.

Motor control — AC/DC variable-speed and static motor drives.

Power conversion — Inverters, variable-frequency drives and propulsion converters.

Renewable energy — Solar and wind power conversion.

Railway — Railway applications and substations.

Compliance and warranty markings

CE RoHS COMPLIANT

WARRANTY 3 YEARS ADISENS

HIGH-CURRENT · 2000 A CERTIFIED

Standards: IEC 61010-1 | EN 50155 | EN 50178:1998 | EN 45545-2:2020 | 6.0 kV isolation

ADISENS Ltd | POD 2, The Old Station House, 15A Main Street, Blackrock, Co. Dublin, A94 T8P8, Ireland
contact@adisens-tech.com | www.adisens-tech.com |

Electrical and performance data

Unless otherwise stated: T_A = +25°C, V_{CC} = ±15 V.

Parameter	Symbol	Test conditions	Min.	Typ.	Max.	Unit
Primary nominal RMS current	IPN	-	-	2000	-	A
Primary current measuring range	IPM	-	-3500	-	+3500	A
Turns ratio	NP/NS	-	-	1:5000	-	-
Secondary nominal RMS current	ISN	-	-	±400	-	mA
Secondary coil resistance	RS	-	-	18	-	Ohm
Supply voltage	VCC	Tolerance: ±5%	-	±15…±24	-	V
Offset current	IOE	IPN, TA = 25°C	-	< ±0.2	-	mA
Offset-current temperature coefficient	IOT	IP = 0, -40 to +85°C	-	< ±0.005	-	mA/°C
Linearity error	εL	-	-	< 0.1	-	%
Accuracy	XG	IPN, TA = 25°C	-	< ±0.2	-	% IPN
di/dt accurately followed	di/dt	-	>100	-	-	A/µs
Frequency bandwidth	BW	-3 dB, IPN	DC	-	200	kHz
Response time	Tr	90% of VPN	-	< 1.0	-	µs
Power consumption	IC	-	-	20 + IS	-	mA
Insulation voltage	Vd	50/60 Hz, 1 min, AC	-	6.0	-	kV
Operating temperature	TA	-	-40	-	+85	°C
Storage temperature	TS	-	-55	-	+125	°C
Mass	M	-	-	1100	-	g
Plastic material	-	-	-	PBT G30/G15, UL94-V0	-	-

Ordering information

Part number	Product code	Nominal current	Measuring range	Connector
OPCO-2000C3-2	10102000020750001	2000 A	-3500 to +3500 A	Integral 3-core PVC output cable — colour code Red (+VCC) / Blue (−VCC) / Yellow (M), cable gland, flying leads

The specified measurement performance is achieved only when the sensor is used within the stated electrical, thermal and load conditions.

ADISENS Ltd | POD 2, The Old Station House, 15A Main Street, Blackrock, Co. Dublin, A94 T8P8, Ireland
contact@adisens-tech.com | www.adisens-tech.com |

Mechanical dimensions and electrical connection

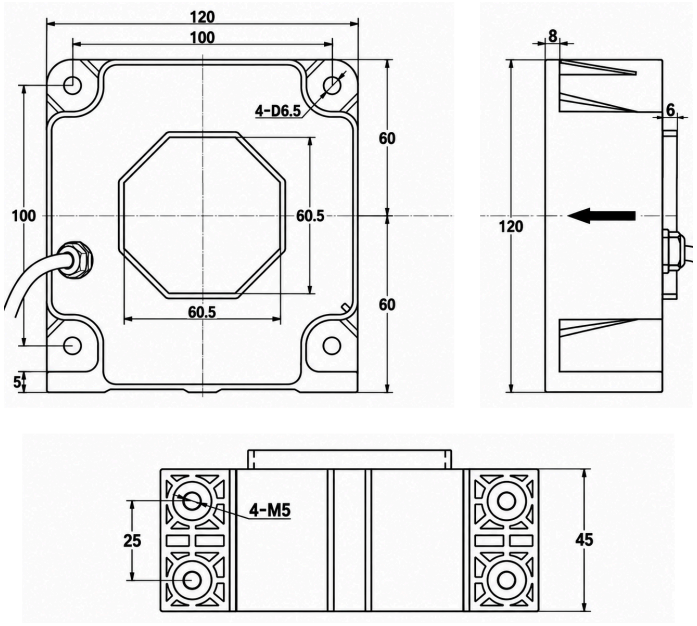

All dimensions are in millimetres. General tolerance: < ±0.5 mm. Overall envelope (cable version): 120 × 120 mm (front flange), 45 mm depth. Primary through-hole: octagonal, 60.5 mm across flats. Mounting: 4 × ø6.5 mm holes (front, 100 × 100 mm pattern) or 4 × M5 threaded holes (base, 25 mm pitch). Cable entry: strain-relief gland.

Terminal definition

Marking	Function	Description
+ (Red)	Positive supply	+VCC
- (Blue)	Negative supply	-VCC
M (Yellow)	Measurement output	Current output; connect the external measurement resistor RM from terminal M to 0 V
NC	Not connected	-

Electrical connection and signal conversion

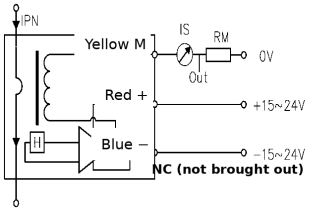

Installation essentials

1. **Signal output:** the primary current is measured as a voltage across the external measurement resistor RM, connected between terminal M and 0 V.
2. **Dynamic performance:** di/dt and response time are best when the primary hole is completely filled by a single busbar.
3. **Thermal limit:** the primary conductor temperature must remain below 100°C.
4. **Customization:** custom designs are available on request for different rated input currents and output voltages.

ADISENS Ltd | POD 2, The Old Station House, 15A Main Street, Blackrock, Co. Dublin, A94 T8P8, Ireland
contact@adisens-tech.com | www.adisens-tech.com |

Safety, compliance and quality information

Safety information

The OPCO-2000C3-2 is a component intended for integration into electrical and electronic equipment by qualified personnel. The equipment manufacturer is responsible for the risk assessment, insulation coordination, protective measures and regulatory conformity of the final system. Do not touch live conductors. Disconnect all power sources before installation, inspection or maintenance. Operate the transducer only within its specified limits.

Compliance and environmental information

Subject	Information
Electrical safety	Designed for integration into equipment assessed to applicable electrical-safety requirements, including IEC 61010-1, EN 50155, EN 50178:1998, EN 45545-2:2020 where relevant to the end application.
Materials	Housing in PBT GF30/GF15, UL 94-V0. Further product material and flammability information is available from ADISENS on request.
CE	EU conformity information and the applicable Declaration of Conformity are available from ADISENS on request.
RoHS / REACH	Product environmental declarations are available from ADISENS on request.
Disposal	Dispose of the product in accordance with local requirements for electrical and electronic equipment. Do not incinerate.

Three-year commercial warranty

ADISENS provides a three-year commercial warranty from the date of delivery, subject to the applicable ADISENS warranty terms and conditions. The warranty does not cover incorrect wiring, operation outside specified ratings, unsuitable environmental exposure, unauthorized modification, mechanical damage or improper system integration.

Document identification and control

Document reference	Revision	Issue date	Language	Product code
FT-OPCO-2000C3-2	V1.0	September 2026	English	10102000020750001

This document is maintained under the ADISENS quality-management document-control process. Always verify that the revision used is the latest version available from ADISENS. Specifications may be updated as part of continuous product improvement. The customer remains responsible for confirming suitability for the intended application.

ADISENS Ltd | POD 2, The Old Station House, 15A Main Street, Blackrock, Co. Dublin, A94 T8P8, Ireland
contact@adisens-tech.com | www.adisens-tech.com |