TECHNICAL DATASHEET

OPUS-2000J3

Product Code : 11302000030400001

Open-loop Hall-effect current transducer for DC, AC, pulsed and mixed-current measurement

The OPUS-2000J3 is an open-loop Hall-effect current transducer of the OPUS series, designed for precise electronic measurement of DC, AC, pulsed and mixed currents up to 2000 A, providing full galvanic isolation between the primary (high-power) and secondary (electronic) circuits. It delivers a proportional analog voltage output, VOUT = VOE + S×IP, with a measuring range of ±5500 A.

Its robust panel/board-mount design, high accuracy and wide bandwidth make it well suited to industrial power conversion, drive systems and high-power electronic equipment where accurate, stable current measurement is required.

2000 A	±5500 A	5.0 kV	5 µs
Rated nominal current	Measuring range	Isolation voltage	Typ. response time

ENGINEERING VALUE

High accuracy — ±0.5% typical accuracy at 25°C over the full measuring range.

Wide bandwidth — 25 kHz (−3 dB) bandwidth with 5 µs typical response time, suited to fast dynamic currents.

Galvanic isolation — reliable separation between primary and secondary circuits, isolation voltage up to 5 kV (50 Hz, 1 min).

Robust design — wide operating temperature range (−40°C to +105°C) suited to demanding industrial environments.

Proportional analog output — bipolar voltage output, dual ±15 V supply.

BEST-FIT APPLICATIONS

Power electronics — industrial power converters, rectifiers and switched-mode power supplies.

Drives — variable-frequency drives (VFD) and industrial motor control.

Energy — renewable-energy conversion systems and battery-charging equipment.

Heavy industry — welding equipment, traction and other high-power electronic systems.

Compliance and warranty markings

CE RoHS COMPLIANT

WARRANTY 3 YEARS ADISENS

HIGH-CURRENT · 2000 A CERTIFIED

Standards: IEC 61010-1 | EN 50178 | 5.0 kV isolation

ADISENS Ltd | POD 2, The Old Station House, 15A Main Street, Blackrock, Co. Dublin, A94 T8P8, Ireland
contact@adisens-tech.com | www.adisens-tech.com |

Electrical and performance data

Unless otherwise stated: T_A = +25°C, V_{CC} = ±15 V, R_L = 10 kΩ.

Parameter	Symbol	Test conditions	Min.	Typ.	Max.	Unit
Primary nominal r.m.s. current	IPN	-	-	2000	-	A
Primary current measuring range	IPM	-	-5500	-	+5500	A
Output voltage	VOUT	VOE + S×IP	-	±4	-	mV
Sensitivity	S	IP=0 to ±IPN	-	2	-	mV/A
Supply voltage	Vcc	±5%	-	±15	-	V
Current consumption	Ic	IP=0	-	±25/−25	-	mA
Load resistance	RL	IP=0 to ±IPN	1	10	-	kΩ
Load capacitance	CL	IP=0 to ±IPN	-	100	-	pF
Linearity error	EL	T_A=−40°C to +105°C, IP=0 to ±IPN	-	±0.5	-	% IPN
Accuracy	XG	T_A=+25°C, IP=0 to ±IPN	-1.2	±0.5	1.2	% IPN
Accuracy	XG	T_A=−40°C to +105°C, IP=0 to ±IPN	-4.5	±1.5	3.5	% IPN
Sensitivity error	Es	T_A=−40°C to +85°C, IP=0 to ±IPN	-3	-	3	%
Symmetry	ESYM	T_A=−40°C to +105°C, IP=0 to ±IPN	99	100	101	%
Hysteresis	VOH	IP=±IPN → 0	-10	±5	10	mV
Electric offset	VOE	T_A=+25°C, IP=0	-25	±10	25	mV
Electric offset	VOE	T_A=−40°C to +105°C, IP=0	-40	±20	40	mV
Response time	Tr	di/dt > 50 A/µs, 10% to 90% of IPN	-	5	-	µs
Bandwidth	BW	-3 dB	DC	25	-	kHz

Insulation and environmental characteristics

Parameter	Symbol	Typical	Unit
Dielectric strength	VD	5	kV (50Hz,1mn)
Insulation resistance	RIS	1000	MΩ
Creepage distance	dCP	23	mm
Clearance	dCL	14	mm
Ambient operating temperature	TA	-40 … +105	°C
Ambient storage temperature	TSTG	-40 … +105	°C
Mass	m	300	g

Ordering information		
Part number	**Product code**	**Rated current / measuring range**
OPUS-2000J3	11302000030400001	2000 A / ±5500 A

The specified measurement performance is achieved only when the sensor is used within the stated electrical, thermal and load conditions.

ADISENS Ltd | POD 2, The Old Station House, 15A Main Street, Blackrock, Co. Dublin, A94 T8P8, Ireland
contact@adisens-tech.com | www.adisens-tech.com |

Typical performance characteristics (1/2)

Sample characterization data from the ADISENS OPUS production test bench, common to the OPUS-500/850/1000/1500/2000/2500 range (the output-voltage-vs-primary-current plot is grouped by rated current, per the manufacturer test data); individual units are guaranteed only to the Min./Max. limits specified in the electrical and performance data table.

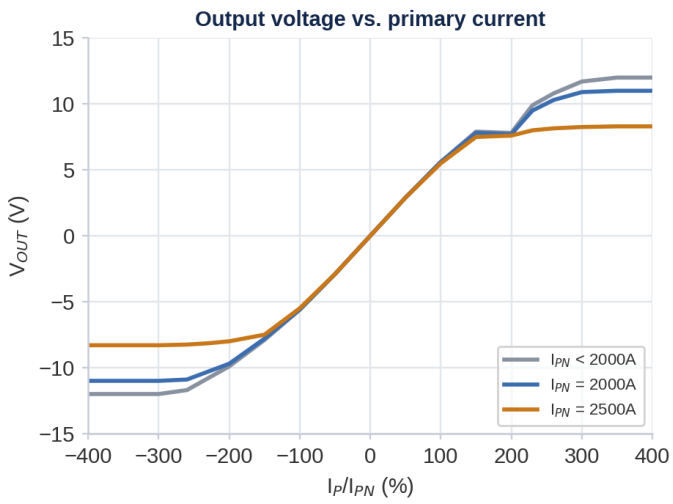

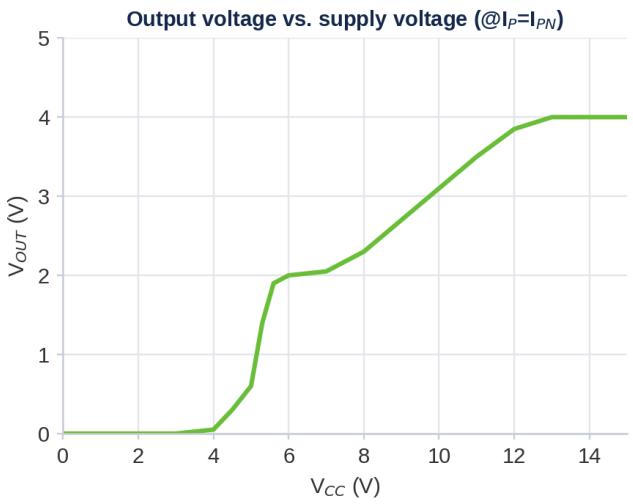

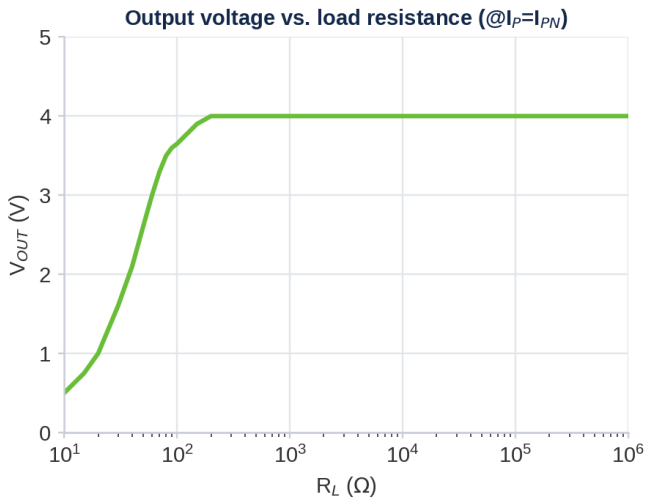

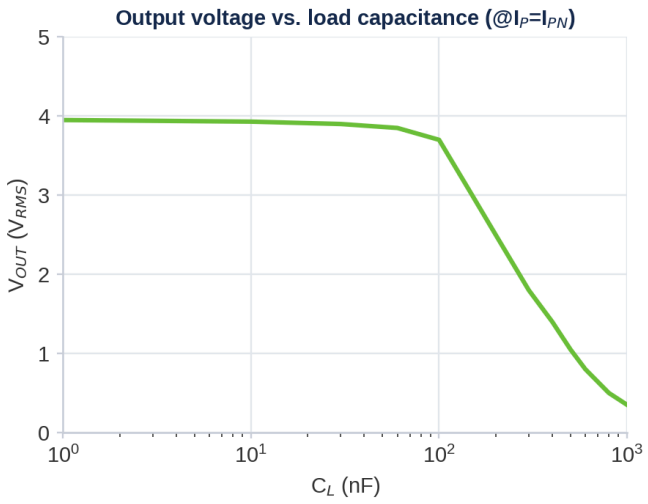

ADISENS Ltd | POD 2, The Old Station House, 15A Main Street, Blackrock, Co. Dublin, A94 T8P8, Ireland
contact@adisens-tech.com | www.adisens-tech.com |

Typical performance characteristics (2/2)

Bode plot, sensitivity and AVG−3σ / AVG / AVG+3σ temperature distributions; sensitivity data specific to OPUS-2000J3, other panels common to the OPUS-500/850/1000/1500/2000/2500 range.

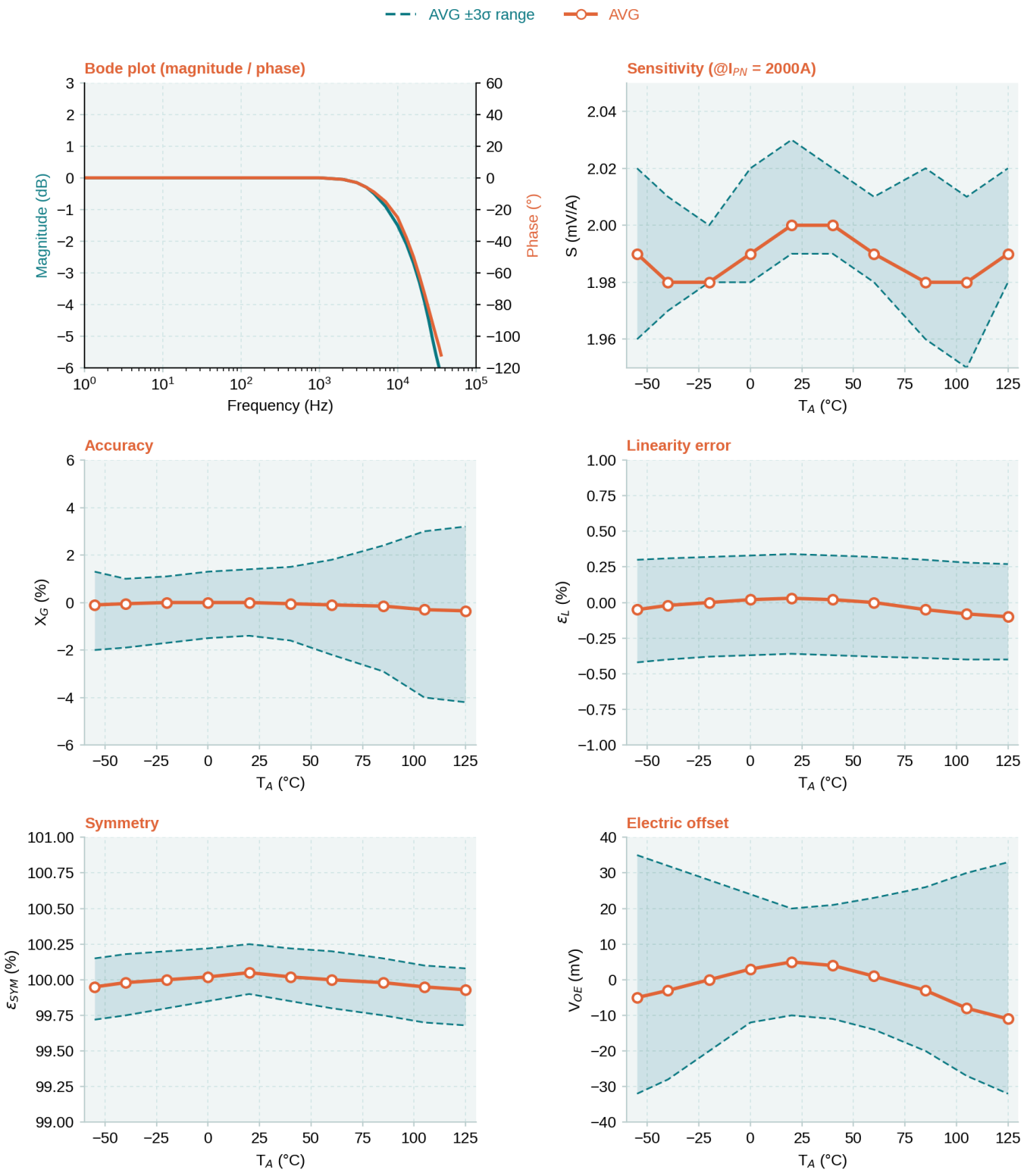

ADISENS Ltd | POD 2, The Old Station House, 15A Main Street, Blackrock, Co. Dublin, A94 T8P8, Ireland
contact@adisens-tech.com | www.adisens-tech.com |

Mechanical dimensions and connections

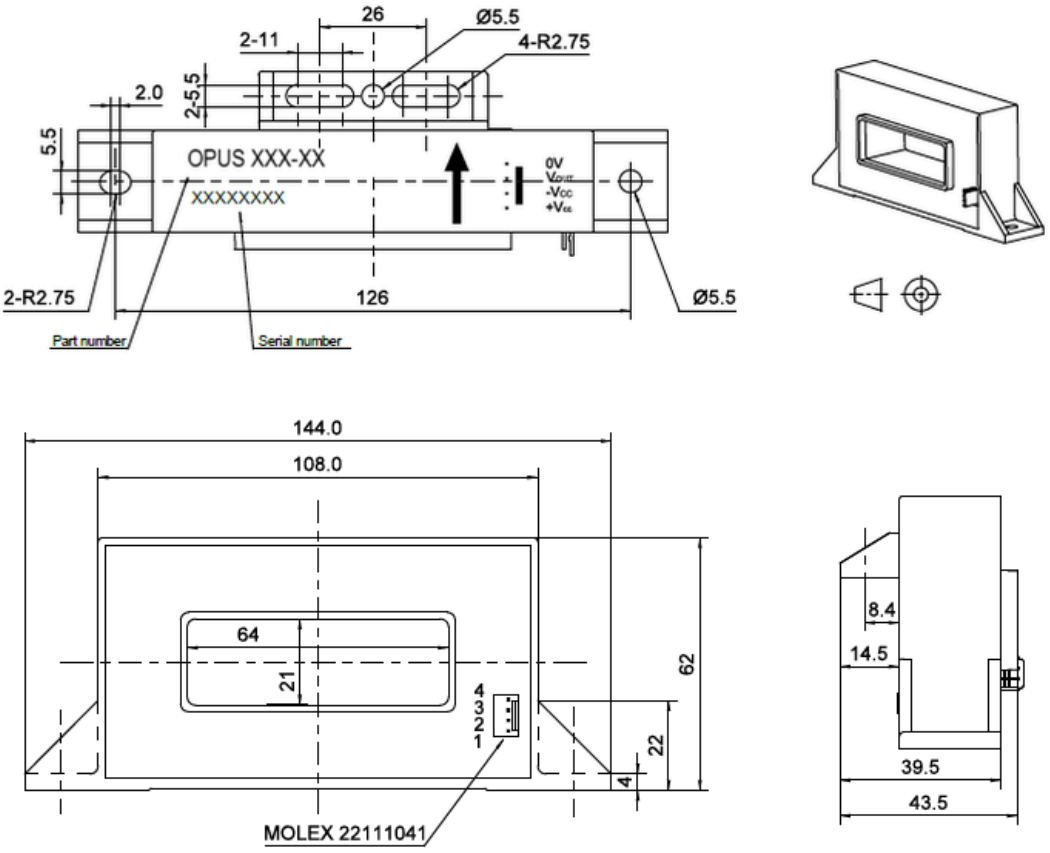

All dimensions are in millimetres. Tolerances for scales: ±1 mm. Panel/board-mount package with a 4-pin secondary connector (Molex 22111041, 2.54 mm pitch) and a rectangular primary-conductor aperture, per drawing.

Pin definition

Pin no.	Pin name	Description
1	0V	Supply and signal ground (0 V)
2	VOUT	Analog output voltage, VOUT = VOE + S×IP
3	−VCC	Negative supply voltage, −15 V ±5%
4	+VCC	Positive supply voltage, +15 V ±5%

Installation essentials

1. **Mounting:** secure the transducer to the panel/PCB using the mounting through-holes shown on the drawing, in a location that prevents movement or vibration during operation.
2. **Supply and output:** connect ±VCC/0V per pin definition; the bipolar analog output VOUT is referenced to 0V.
3. **Load:** the output stage is characterized with RL = 10 kΩ; refer to the load-resistance and load-capacitance characteristics for other loading conditions.
4. **Grounding:** ensure correct grounding of the secondary circuit in accordance with the electrical system design, to prevent electric shock and improve system safety and performance.

ADISENS Ltd | POD 2, The Old Station House, 15A Main Street, Blackrock, Co. Dublin, A94 T8P8, Ireland
contact@adisens-tech.com | www.adisens-tech.com |

Safety, compliance and quality information

Safety information

The OPUS-2000J3 is a component intended for installation in electrical and electronic systems by qualified personnel, in compliance with applicable international standards such as IEC 61010-1 and local regulations. This transducer operates in high-voltage environments and must be handled with care to avoid direct contact with live electrical components; there is a risk of serious injury or death from electric shock if proper precautions are not taken. It must be used exclusively within limited-energy secondary circuits as specified by IEC 61010-1. Galvanic isolation between primary and secondary circuits does not provide absolute protection against electric shock — always de-energize circuits before installation or maintenance.

Compliance and environmental information

Subject	Information
Electrical safety	Designed for integration into equipment assessed to applicable electrical-safety requirements, including IEC 61010-1, EN 50178 where relevant to the end application.
Materials	Moulded plastic housing. Further product material and flammability information is available from ADISENS on request.
CE	EU conformity information and the applicable Declaration of Conformity are available from ADISENS on request.
RoHS / REACH	RoHS & REACH compliant. Product environmental declarations are available from ADISENS on request.
Disposal	Dispose of the product in accordance with local requirements for electrical and electronic equipment. Do not incinerate.

Three-year commercial warranty

ADISENS provides a three-year commercial warranty from the date of delivery, subject to the applicable ADISENS warranty terms and conditions. The warranty does not cover incorrect wiring, operation outside specified ratings, unsuitable environmental exposure, unauthorized modification, mechanical damage or improper system integration.

Document identification and control

Document reference	Revision	Issue date	Language	Product code
FT-OPUS-2000J3	V1.0	September 2026	English	11302000030400001

This document is maintained under the ADISENS quality-management document-control process. Always verify that the revision used is the latest version available from ADISENS. Specifications may be updated as part of continuous product improvement. The customer remains responsible for confirming suitability for the intended application.

ADISENS Ltd | POD 2, The Old Station House, 15A Main Street, Blackrock, Co. Dublin, A94 T8P8, Ireland
contact@adisens-tech.com | www.adisens-tech.com |