TECHNICAL DATASHEET

TCS-10004S4

Product Code : 11501000021040001

Closed-loop current transducer for demanding railway and industrial traction applications

The TCS-10004S4 is a closed-loop (compensated) current transducer, current-output type, specifically designed for demanding railway applications, providing accurate and reliable measurement of both alternating current (AC) and direct current (DC) up to 1000 A, with a ±3000 A measuring range.

It ensures high galvanic isolation between the primary and secondary circuits, optimal safety and protection in high-voltage environments, and is built for robust, long-lasting operation in harsh railway and industrial environments.

1000 A	±3000 A	13.4 kV	< 1 µs
Nominal primary current	Measuring range	Dielectric strength (AC)	Response time

ENGINEERING VALUE

High accuracy — < ±0.4% accuracy at IPN, T=25°C, with < 0.1% linearity error and low temperature drift.

High galvanic isolation — 13.4 kV dielectric withstand (AC, 50/60 Hz, 1 min), ensuring optimal safety in high-voltage railway environments.

High immunity to external interference — robust design for harsh environments, easy installation, can be customized on request.

Fast, wide-bandwidth response — di/dt accurately followed >100 A/µs, response time < 1 µs (90% of IPN).

BEST-FIT APPLICATIONS

Railway — traction systems and energy conversion in railway infrastructure, auxiliary converters, substations.

Power electronics — variable speed drives, welding machines, switching power supplies.

Energy storage — battery-supplied applications, uninterruptible power supplies (UPS), electrochemical applications.

Compliance and warranty markings

CE RoHS COMPLIANT

WARRANTY 3 YEARS ADISENS

RAILWAY · EN 61373 CERTIFIED

Standards: IEC60950-1:2001 | EN50178:1981 | EN50155:2021 | EN60947-1:2004 | EN61373 | EN45545

ADISENS Ltd | POD 2, The Old Station House, 15A Main Street, Blackrock, Co. Dublin, A94 T8P8, Ireland
contact@adisens-tech.com | www.adisens-tech.com |

Electrical and performance data

Unless otherwise stated: T_A = +25°C, V_{CC} = ±15 V.

Parameter	Symbol	Test conditions	Min.	Typ.	Max.	Unit
Primary nominal r.m.s. current	IPN	-	-	1000	-	A
Primary current measuring range	IP	-	-3000	-	+3000	A
Output current RMS	ISN	-	-	250	-	mA
Turns ratio NP/NS	T	-	-	1/4000	-	-
Secondary coil resistance	RS	@±15V	-	26	-	Ω
Inside resistance	RM	RMmax = NS × (VCmin − 0.5V)/IP − RSmax − 1.1	-	-	-	Ohm
Supply voltage	VC	±5%	±15	-	±24	V
Current consumption	IC	-	-	< 32 + IS	-	mA
Accuracy	XG	@IPN, T=25°C	-	< ±0.4	-	%
Offset current	IOE	@IPN, T=25°C	-	< ±0.5	-	mA
Temperature variation of IOE	IOT	@IP=0, -40 … +85°C	-	< ±0.5	-	mA/ °C
Linearity error	Er	-	-	< 0.1	-	%
Di/dt	-	-	>100	-	-	A/µs
Response time	TD	@90% of IPN	-	< 1.0	-	µs
Bandwidth	BW	@-1dB, IPN	DC	-	100	kHz
Dielectric strength for AC insulation	Vd	@50/60 Hz, 1 min	-	13.4	-	kV
Operating temperature	TA	-	-50	-	+85	°C
Storage temperature	TS	-	-55	-	+90	°C
Mass	M	-	-	460	-	g
Plastic material	-	-	-	PBT G30/G15, UL94-V0	-	-

Ordering information			
Part number	**Product code**	**Nominal current**	**Measuring range**
TCS-10004S4	11501000021040001	1000 A	-3000 to +3000 A

The specified measurement performance is achieved only when the sensor is used within the stated electrical, thermal and load conditions.

ADISENS Ltd | POD 2, The Old Station House, 15A Main Street, Blackrock, Co. Dublin, A94 T8P8, Ireland
contact@adisens-tech.com | www.adisens-tech.com |

Mechanical dimensions and electrical connection

DIMENSIONS :

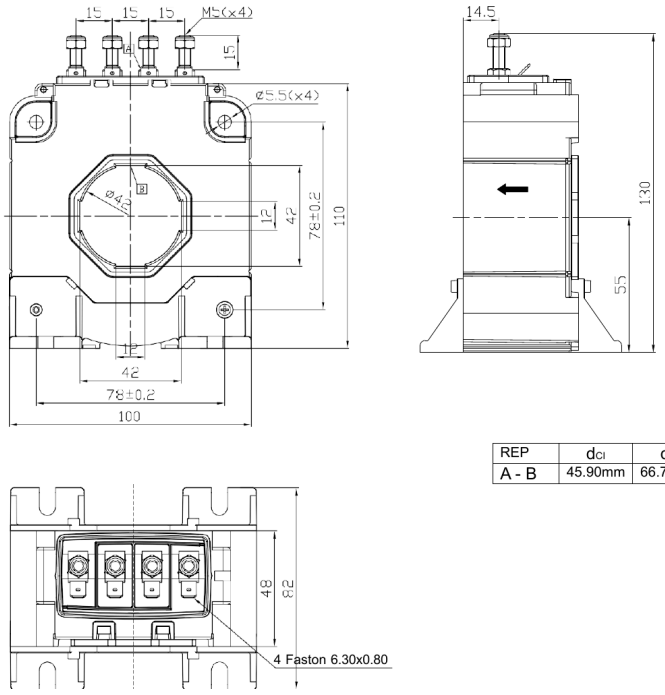

REP	d_{CI}	d_{CP}
A - B	45.90mm	66.70mm

All dimensions are in millimetres. General tolerance: ±0.5 mm. Primary through-hole: octagonal, ø42 mm. Primary connection: 4 threaded studs M5 (mounting pattern 78×110 mm). Secondary connection: 4 Faston tabs 6.30×0.80 mm, recommended tightening torque 2.2 N·m.

Terminal definition

Marking	Function	Description
+	Positive supply	+VCC
−	Negative supply	−VCC
M	Measurement output	Current output; connect the external measurement resistor RM from terminal M to 0 V

Electrical connection and signal conversion

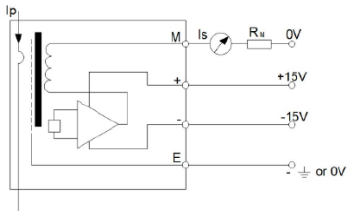

Installation essentials

1. **Signal output:** the primary current is measured as a voltage across the external measurement resistor RM, connected between terminal M and 0 V.
2. **Dynamic performance:** di/dt and response time are best when the primary hole/aperture is completely filled by a single busbar.
3. **Thermal limit:** the primary conductor temperature must remain within the transducer's specified operating range.
4. **Customization:** custom designs are available on request for different rated input currents and output configurations.

ADISENS Ltd | POD 2, The Old Station House, 15A Main Street, Blackrock, Co. Dublin, A94 T8P8, Ireland
contact@adisens-tech.com | www.adisens-tech.com |

Safety, compliance and quality information

Safety information

The TCS-10004S4 is a component intended for installation in electrical and electronic systems by qualified personnel, in compliance with applicable international standards such as IEC 61010-1 and local regulations. This transducer operates in high-voltage environments and must be handled with care to avoid direct contact with live electrical components; there is a risk of serious injury or death from electric shock if proper precautions are not taken. It must be used exclusively within limited-energy secondary circuits as specified by IEC 61010-1. Galvanic isolation between primary and secondary circuits does not provide absolute protection against electric shock — always de-energize circuits before installation or maintenance.

Compliance and environmental information

Subject	Information
Electrical safety	Designed for integration into equipment assessed to applicable electrical-safety requirements, including IEC60950-1:2001, EN50178:1981, EN50155:2021, EN60947-1:2004, EN61373, EN45545 where relevant to the end application.
Materials	Housing in PBT G30/G15, UL94-V0. Further product material and flammability information is available from ADISENS on request.
CE	EU conformity information and the applicable Declaration of Conformity are available from ADISENS on request.
RoHS / REACH	RoHS & REACH compliant. Product environmental declarations are available from ADISENS on request.
Disposal	Dispose of the product in accordance with local requirements for electrical and electronic equipment. Do not incinerate.

Three-year commercial warranty

ADISENS provides a three-year commercial warranty from the date of delivery, subject to the applicable ADISENS warranty terms and conditions. The warranty does not cover incorrect wiring, operation outside specified ratings, unsuitable environmental exposure, unauthorized modification, mechanical damage or improper system integration.

Document identification and control

Document reference	Revision	Issue date	Language	Product code
FT-TCS-10004S4	V1.0	September 2026	English	11501000021040001

This document is maintained under the ADISENS quality-management document-control process. Always verify that the revision used is the latest version available from ADISENS. Specifications may be updated as part of continuous product improvement. The customer remains responsible for confirming suitability for the intended application.

ADISENS Ltd | POD 2, The Old Station House, 15A Main Street, Blackrock, Co. Dublin, A94 T8P8, Ireland
contact@adisens-tech.com | www.adisens-tech.com |