TECHNICAL DATASHEET

VCS-C-400J4

Product Code : 11700400031800001

Open-loop Hall-effect current transducer for DC, AC, pulsed and arbitrary-waveform current measurement

The VCS-C-400J4 is an open-loop current sensor designed for the accurate measurement of DC, AC, pulsed currents, and arbitrary waveform currents. It ensures galvanic isolation between the primary and secondary circuits, making it ideal for applications where precision and safety are paramount. Its rectangular shape allows it to be integrated into the smallest spaces, making it suitable for busbars with dimensions up to 40.5 mm x 30.5 mm.

It delivers a proportional analog voltage output, VOUT = VOE + S×IP, with a measuring range of ±1200 A, and is well suited to DC motor drives, inverter and variable-frequency drives (VFD), uninterruptible power supplies (UPS), welding power supplies and switching power supplies.

400 A	±1200 A	5.0 kV	25 kHz
Rated nominal current	Measuring range	Isolation voltage	Bandwidth (−3 dB)

ENGINEERING VALUE

Low temperature coefficient — stable sensitivity and offset over a wide operating temperature range.

Galvanic isolation — reliable separation between primary and secondary circuits, isolation voltage up to 5 kV (50 Hz, 1 min).

High immunity to external interference — suited to electrically noisy industrial environments.

Excellent linearity and light-weight design — compact rectangular housing (320 g) for space-constrained busbar installations.

BEST-FIT APPLICATIONS

DC motor drives — and inverter / variable-frequency drives (VFD).

Power supplies — uninterruptible power supplies (UPS) and switching power supplies.

Heavy industry — welding-equipment power supplies.

Industrial application domain — per manufacturer classification.

Compliance and warranty markings

CE RoHS COMPLIANT

WARRANTY 3 YEARS ADISENS

Standards: IEC 61010-1 EN 50178

ADISENS Ltd | POD 2, The Old Station House, 15A Main Street, Blackrock, Co. Dublin, A94 T8P8, Ireland
contact@adisens-tech.com | www.adisens-tech.com |

Electrical and performance data

Unless otherwise stated: T_A = +25°C, V_{CC} = ±15 V, R_L = 10 kΩ.

Parameter	Symbol	Test conditions	Min.	Typ.	Max.	Unit
Primary nominal r.m.s. current	IPN	-	-	400	-	A
Primary current measuring range	IPM	-	-1200	-	+1200	A
Output voltage	VOUT	VOE + S×IP	-	±4	-	mV
Sensitivity	S	IP=0 to ±IPN	-	10	-	mV/A
Supply voltage	Vcc	±5%	-	±15	-	V
Current consumption	Ic	IP=0	-	±25/−5	-	mA
Load resistance	RL	IP=0 to ±IPN	1	10	-	kΩ
Load capacitance	CL	IP=0 to ±IPN	-	100	-	pF
Linearity error	EL	T_A=−40°C to +105°C, IP=0 to ±IPN	-	±0.2	-	% IPN
Accuracy	XG	T_A=+25°C, IP=0 to ±IPN	-1	±0.5	1	% IPN
Accuracy	XG	T_A=−40°C to +40°C, IP=0 to ±IPN	-2	±0.5	2	% IPN
Accuracy	XG	T_A=+40°C to +85°C, IP=0 to ±IPN	-3	-	1	% IPN
Accuracy	XG	T_A=+85°C to +105°C, IP=0 to ±IPN	-4.5	-	1	% IPN
Sensitivity error	Es	T_A=−40°C to +85°C, IP=0 to ±IPN	-2	-	2	%
Symmetry	ESYM	T_A=−40°C to +105°C, IP=0 to ±IPN	99	100	100	%
Hysteresis	VOH	IP=±IPN → 0	-10	±5	10	mV
Electric offset	VOE	T_A=−40°C to +85°C, IP=0	-35	±20	35	mV
Electric offset	VOE	T_A=+85°C to +105°C, IP=0	-40	±20	40	mV
Response time	Tr	di/dt > 50 A/µs, 10% to 90% of IPN	-	5	-	µs
Bandwidth	BW	-3 dB	DC	25	-	kHz

Insulation and environmental characteristics

Parameter	Symbol	Typical	Unit
Dielectric strength	VD	5	kV (50Hz,1mn)
Insulation resistance	RIS	1000	MΩ
Creepage distance	dCP	15	mm
Clearance	dCL	7	mm
Ambient operating temperature	TA	-40 … +105	°C
Ambient storage temperature	TSTG	-40 … +105	°C
Mass	m	320	g

Ordering information

Part number	Product code	Rated current / measuring range
VCS-C-400J4	11700400031800001	400 A / ±1200 A

The specified measurement performance is achieved only when the sensor is used within the stated electrical, thermal and load conditions.

ADISENS Ltd | POD 2, The Old Station House, 15A Main Street, Blackrock, Co. Dublin, A94 T8P8, Ireland
contact@adisens-tech.com | www.adisens-tech.com |

Typical performance characteristics (1/2)

Sample characterization data from the ADISENS VCS-C production test bench, common to the VCS-C-200/400/500/600/800/1000/1200/1500 range (the output-voltage-vs-primary-current plot is grouped by rated current, per the manufacturer test data); individual units are guaranteed only to the Min./Max. limits specified in the electrical and performance data table.

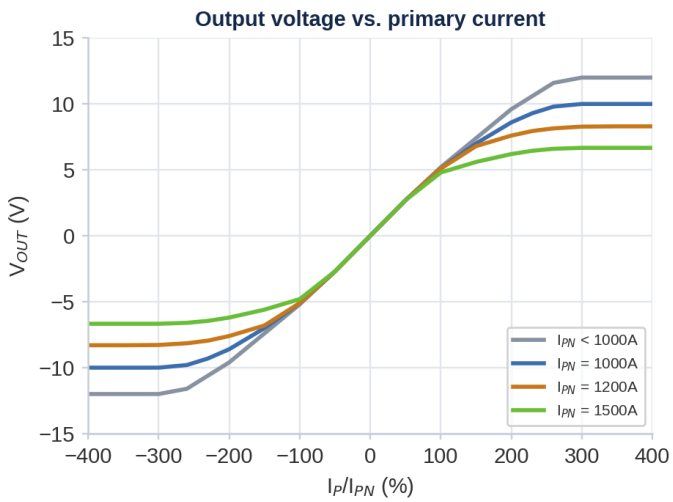

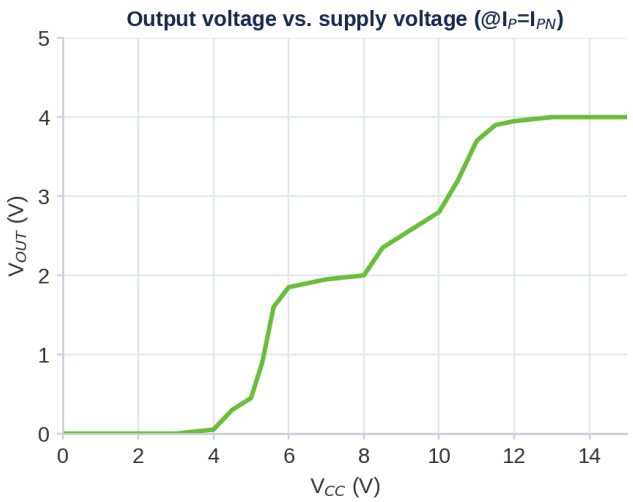

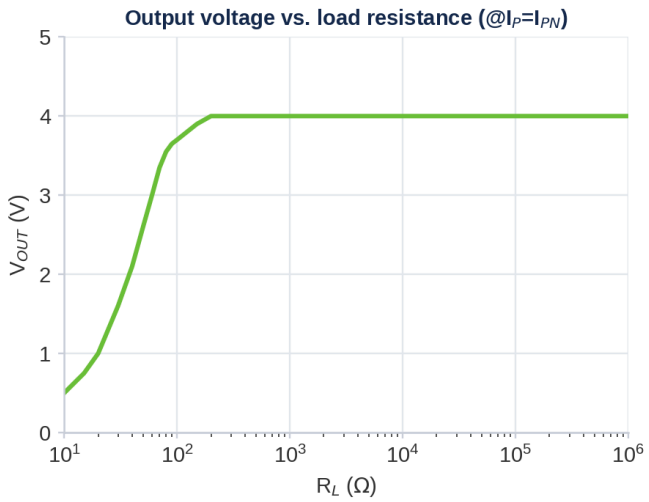

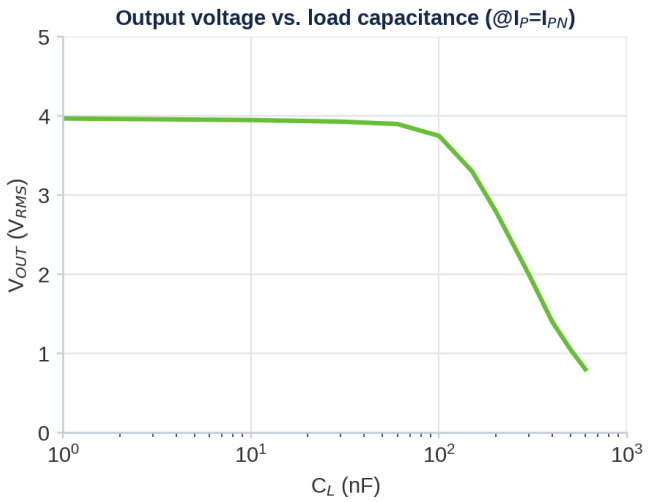

ADISENS Ltd | POD 2, The Old Station House, 15A Main Street, Blackrock, Co. Dublin, A94 T8P8, Ireland
contact@adisens-tech.com | www.adisens-tech.com |

Typical performance characteristics (2/2)

Bode plot, sensitivity and AVG−3σ / AVG / AVG+3σ temperature distributions; sensitivity data specific to VCS-C-400J4, other panels common to the VCS-C-200/400/500/600/800/1000/1200/1500 range.

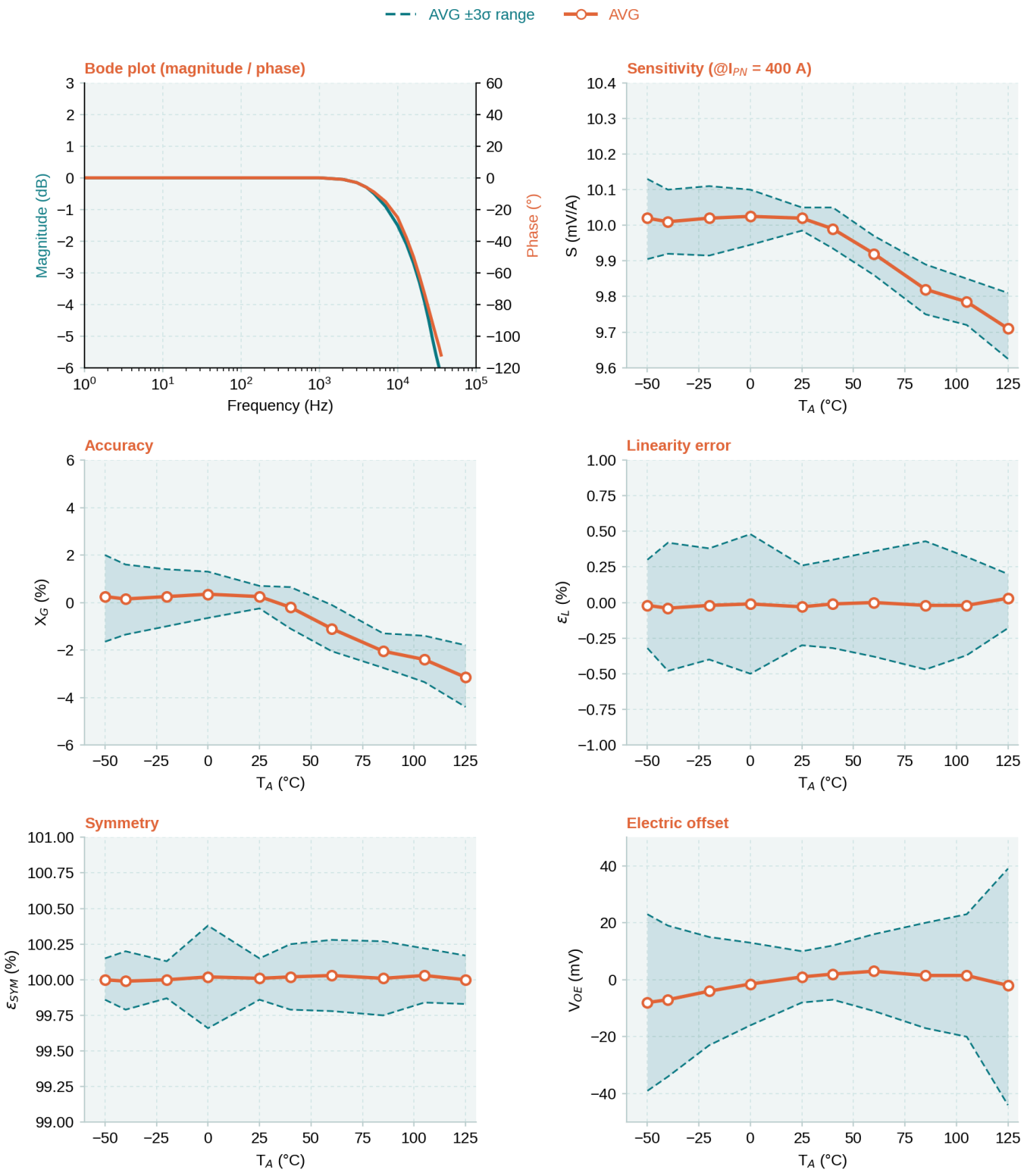

ADISENS Ltd | POD 2, The Old Station House, 15A Main Street, Blackrock, Co. Dublin, A94 T8P8, Ireland
contact@adisens-tech.com | www.adisens-tech.com |

Mechanical dimensions and connections

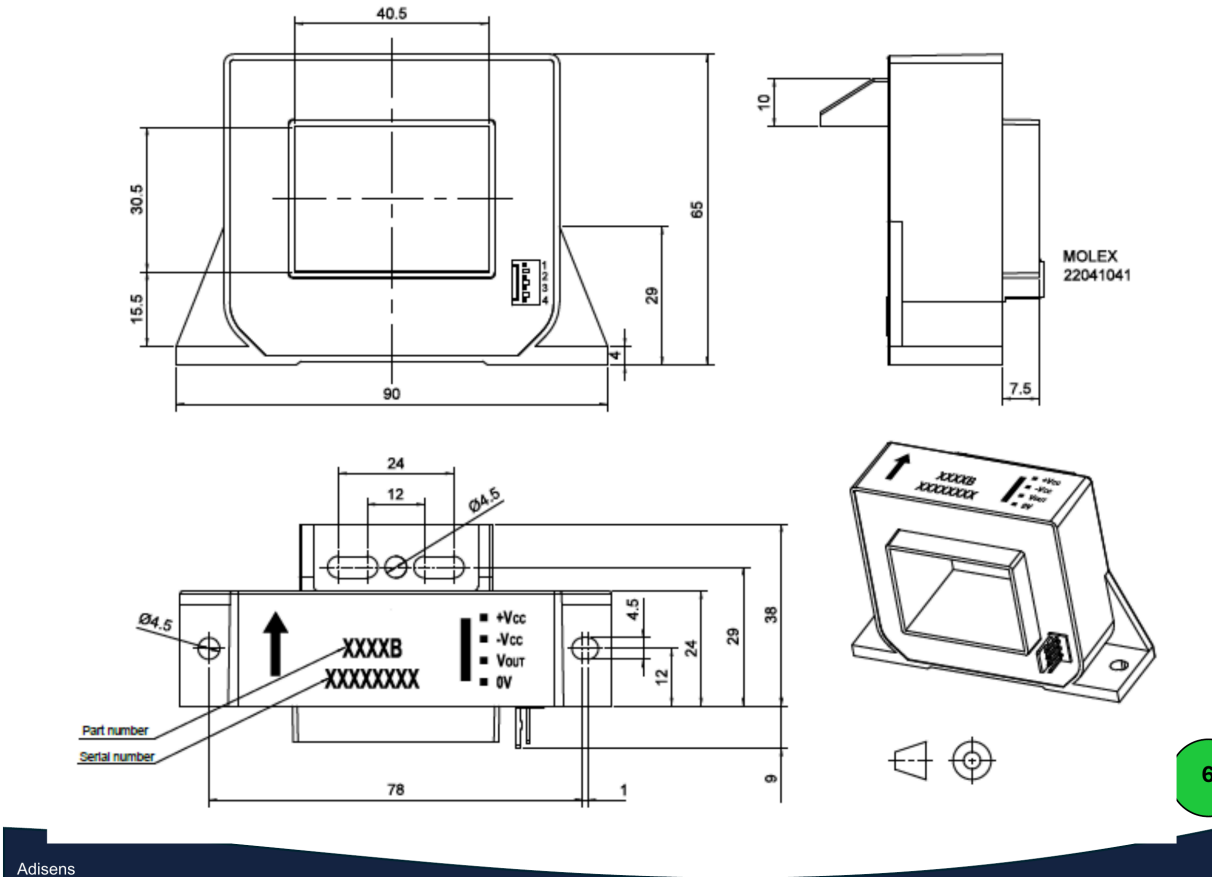

All dimensions are in millimetres. Tolerances for scales: ±1 mm. Rectangular busbar-mount package (90 x 65 x 29 mm) with a 4-pin secondary connector (Molex 22041041) and a rectangular primary-conductor aperture (40.5 x 30.5 mm), per drawing.

Pin definition

Pin no.	Pin name	Description
1	+VCC	Positive supply voltage, +15 V ±5%
2	−VCC	Negative supply voltage, −15 V ±5%
3	VOUT	Analog output voltage, VOUT = VOE + S×IP
4	0V	Supply and signal ground (0 V)

Installation essentials

1. **Mounting:** 1 × Ø4.5 mm hole and 1 × Ø4.5 mm slotted hole with 2 × M4 screws (recommended torque 1.2 N·m), or 1 × Ø4.5 mm hole and 2 × Ø4.5 mm slotted holes with 3 × M4 screws, fixed to the busbar.
2. **Primary conductor:** through-hole dimensions 40 mm × 30 mm.
3. **Secondary electrical connection:** Molex 22041041 (old PN: Molex 5045-04A); crimp housing Molex 22011042, crimping terminal Molex 08500113.
4. **Grounding:** ensure correct grounding of the secondary circuit in accordance with the electrical system design, to prevent electric shock and improve system safety and performance.

ADISENS Ltd | POD 2, The Old Station House, 15A Main Street, Blackrock, Co. Dublin, A94 T8P8, Ireland
contact@adisens-tech.com | www.adisens-tech.com |

Safety, compliance and quality information

Safety information

The VCS-C-400J4 is a component intended for installation in electrical and electronic systems by qualified personnel, in compliance with applicable international standards such as IEC 61010-1 and local regulations. This transducer operates in high-voltage environments and must be handled with care to avoid direct contact with live electrical components; there is a risk of serious injury or death from electric shock if proper precautions are not taken. It must be used exclusively within limited-energy secondary circuits as specified by IEC 61010-1. Galvanic isolation between primary and secondary circuits does not provide absolute protection against electric shock — always de-energize circuits before installation or maintenance.

Compliance and environmental information

Subject	Information
Electrical safety	Designed for integration into equipment assessed to applicable electrical-safety requirements, including IEC 61010-1, EN 50178 where relevant to the end application.
Materials	Moulded plastic housing. Further product material and flammability information is available from ADISENS on request.
CE	EU conformity information and the applicable Declaration of Conformity are available from ADISENS on request.
RoHS / REACH	RoHS & REACH compliant. Product environmental declarations are available from ADISENS on request.
Disposal	Dispose of the product in accordance with local requirements for electrical and electronic equipment. Do not incinerate.

Three-year commercial warranty

ADISENS provides a three-year commercial warranty from the date of delivery, subject to the applicable ADISENS warranty terms and conditions. The warranty does not cover incorrect wiring, operation outside specified ratings, unsuitable environmental exposure, unauthorized modification, mechanical damage or improper system integration.

Document identification and control

Document reference	Revision	Issue date	Language	Product code
FT-VCS-C-400J4	V1.0	September 2026	English	11700400031800001

This document is maintained under the ADISENS quality-management document-control process. Always verify that the revision used is the latest version available from ADISENS. Specifications may be updated as part of continuous product improvement. The customer remains responsible for confirming suitability for the intended application.

ADISENS Ltd | POD 2, The Old Station House, 15A Main Street, Blackrock, Co. Dublin, A94 T8P8, Ireland
contact@adisens-tech.com | www.adisens-tech.com |