TECHNICAL DATASHEET

VPS-600J4

Product Code : 11800600031800001

Open-loop Hall-effect current transducer for DC, AC, pulsed and mixed currents

The VPS-600J4 is an open-loop current transducer specifically designed for the electronic measurement of DC, AC, pulsed and mixed currents. It provides galvanic isolation between the primary circuit (high power) and the secondary circuit (electronics), enabling accurate measurements over a wide range of current waveforms.

Its shape makes it easy to fit into compact spaces, making it particularly suitable for cables and busbars up to 32 mm wide. One design covers the full range of current ratings, simplifying stocking and integration across a product line.

600 A	±1200 A	3.0 kV	< 3.0 µs
Primary nominal current	Primary current measuring range	Isolation voltage	Response time

ENGINEERING VALUE

Low temperature drift — thermal drift < ±1 mV/°C (offset) and < ±0.05%/°C (gain).

One design for the whole range — a single mechanical envelope covers 100 A to 600 A, simplifying specification and stocking.

High immunity to external interference — low power consumption, very low insertion losses, current overload capability.

Fast response — response time < 3.0 µs (90% of I_{PN}), di/dt > 50 A/µs.

BEST-FIT APPLICATIONS

AC variable-speed drives and servo motors — accurate current feedback across the full speed range.

Battery-supplied applications — low power consumption, wide current overload capability.

SMPS & UPS — fast response and low insertion losses under high-frequency switching.

Welding power supplies and static converters for DC motor drives — robust measurement of pulsed and mixed current waveforms.

Compliance and warranty markings

CE RoHS COMPLIANT

WARRANTY 3 YEARS ADISENS

Standards: IEC 61010-1 EN 50178

ADISENS Ltd | POD 2, The Old Station House, 15A Main Street, Blackrock, Co. Dublin, A94 T8P8, Ireland
contact@adisens-tech.com | www.adisens-tech.com |

Electrical and performance data

Unless otherwise stated: T_A = +25°C, V_{CC} = ±15 VDC, R_L = 2.0 kΩ.

Parameter	Symbol	Condition	Min.	Typ.	Max.	Unit
ELECTRICAL DATA						
Primary nominal r.m.s. current	I_{PN}	-	-	600	-	A
Primary current measuring range	I_{PM}	-	-1200	-	1200	A
Output voltage	V_{OUT}	$V_{OE} + S \times I_P$	-	±4	-	mV
Supply voltage	V_{CC}	±5%	-	±15	-	V
Current consumption	I_C	@ 0…±I_{PN}	-	< 15	-	mA
Offset voltage	V_O	@I_{PN}=0, T_A=25°C	-	< ±10	-	mV
Load resistance	R_L	I_P=0 to ±I_{PN}	>10	-	-	kΩ
STATIC PERFORMANCE DATA						
Linearity error	E_L	T_A=25°C, I_P: 0 to ±I_{PN}	-	< ±0.5	-	% I_{PN}
Accuracy	X_G	T_A=+25°C, @I_{PN}	-	< ±1	-	% I_{PN}
di/dt accurately followed	di/dt	T_A=25°C	-	> 50	-	A/µs
Thermal drift of V_O	V_{OT}	-	-	< ±1	-	mV/°C
Thermal drift of V_{OUT}	$TC\varepsilon_G$	-	-	< ±0.05	-	%/°C
Hysteresis offset voltage	V_{OH}	T_A=+25°C, ±3I_{PN}→0	-	≤ ±20	-	mV
Isolation voltage	V_d	@90% of I_{PN}	-	3.0	-	kV
DYNAMIC PERFORMANCE DATA						
Response time	T_r	90% of I_{PN}	-	< 3.0	-	µs
Bandwidth	B_w	@-3 dB, I_{PN}	DC	50	-	kHz
Operating temperature	T_O	-	-40	-	+85	°C
Storage temperature	T_S	-	-40	-	+125	°C
Mass	M	-	-	210	-	g

Ordering information

Part number	Product code	Primary nominal current	Measuring range
VPS-600J4	11800600031800001	600 A	±1200 A

The specified measurement performance is achieved only when the sensor is used within the stated electrical, thermal and load conditions. Dynamic performance (di/dt and response time) is best with a single busbar completely filling the primary hole.

ADISENS Ltd | POD 2, The Old Station House, 15A Main Street, Blackrock, Co. Dublin, A94 T8P8, Ireland
contact@adisens-tech.com | www.adisens-tech.com |

Mechanical dimensions and electrical connection

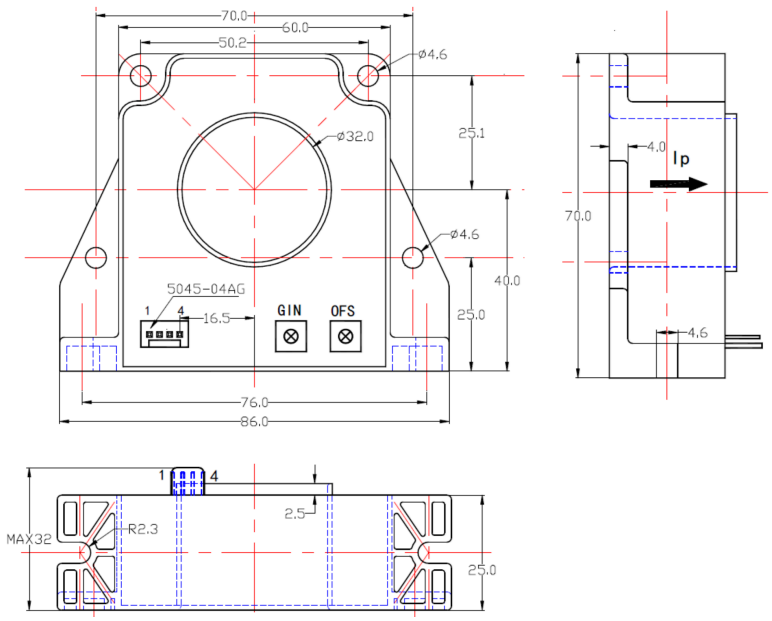

All dimensions are in millimetres. Primary through-hole: Ø32.0 mm. Mounting: 3 × Ø4.6 mm holes (pick one), 1 × M4 copper or SS304 screw (recommended applied torque 0.75 N·m). Mechanical envelope and mounting are shared across the full VPS-xxxJ4 range.

Secondary terminal

Item	Reference
Secondary connector	Molex 22041041 — 4-pole
Crimp housing	Molex 22011042
Crimping terminal	Molex 08500113

Electrical connection and signal conversion

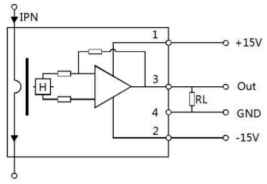

Installation essentials

1. **Output polarity:** V_{OUT} is positive when the primary current flows in the same direction as the arrow indication on the label, and vice versa.
2. **Busbar sizing:** best dynamic performance (di/dt and response time) is obtained with a single busbar completely filling the primary through-hole.
3. **Capacitive load:** excessive capacitive load on the output may distort the signal when measuring high-frequency primary currents.
4. **Connection:** improper connection can cause permanent damage to the sensor — always verify polarity and supply voltage before energizing.

ADISENS Ltd | POD 2, The Old Station House, 15A Main Street, Blackrock, Co. Dublin, A94 T8P8, Ireland
contact@adisens-tech.com | www.adisens-tech.com |

Safety, compliance and quality information

Safety information

The VPS-600J4 is a component intended for installation in electrical and electronic systems by qualified personnel, in compliance with applicable international standards such as IEC 61010-1 and local regulations. This transducer operates in high-voltage environments and must be handled with care to avoid direct contact with live electrical components; there is a risk of serious injury or death from electric shock if proper precautions are not taken. It must be used exclusively within limited-energy secondary circuits as specified by IEC 61010-1. Galvanic isolation between primary and secondary circuits does not provide absolute protection against electric shock — always de-energize circuits before installation or maintenance.

Compliance and environmental information

Subject	Information
Electrical safety	Designed for integration into equipment assessed to applicable electrical-safety requirements, including IEC 61010-1, EN 50178 where relevant to the end application.
Materials	Housing in flame-retardant plastic. Further product material and flammability information is available from ADISENS on request.
CE	EU conformity information and the applicable Declaration of Conformity are available from ADISENS on request.
RoHS / REACH	RoHS & REACH compliant. Product environmental declarations are available from ADISENS on request.
Disposal	Dispose of the product in accordance with local requirements for electrical and electronic equipment. Do not incinerate.

Three-year commercial warranty

ADISENS provides a three-year commercial warranty from the date of delivery, subject to the applicable ADISENS warranty terms and conditions. The warranty does not cover incorrect wiring, operation outside specified ratings, unsuitable environmental exposure, unauthorized modification, mechanical damage or improper system integration.

Document identification and control

Document reference	Revision	Issue date	Language	Product code
FT-VPS-600J4	V1.0	September 2026	English	11800600031800001

This document is maintained under the ADISENS quality-management document-control process. Always verify that the revision used is the latest version available from ADISENS. Specifications may be updated as part of continuous product improvement. The customer remains responsible for confirming suitability for the intended application.

ADISENS Ltd | POD 2, The Old Station House, 15A Main Street, Blackrock, Co. Dublin, A94 T8P8, Ireland
contact@adisens-tech.com | www.adisens-tech.com |